Casting Process Design Guidelines

S. Guleyupoglu
Concurrent Technologies Corporation
Johnstown, Pennsylvania

ABSTRACT

The design of gating and risering, or rigging systems as they are sometimes referred to, has been a very important task in the manufacture of cast components. This paper presents a compilation of common rules of thumb used by foundry experts and guidelines suggested by researchers for better quality castings. The paper is divided into three sections: light alloy, steel and ductile iron castings. Each section presents heuristics commonly used for specific metals.

INTRODUCTION

Casting processes are widely used to produce metal parts in a very economical way, and to obtain complicated shapes with little or no machining. The manufacture of a part involves several steps, the first of which is the design of the part itself, and the specification of the material to be used. This information is passed to the methods engineer, who will choose the casting process, and then design the rigging system necessary to get the molten metal into all regions of the part so as to produce a sound casting. Two major considerations in the casting design are the quality of the final product and the yield of the casting, both of which heavily depend upon the rigging system used.

A generic casting is illustrated in Fig. 1. The elements shown in the figure are actually cavities in the sand mold. The sand mold is enclosed in a flask that consists of two parts: the upper half, or *cope* and the lower half, or *drag*. The plane between the cope and the drag is called the *parting plane*. The parting plane is sometimes referred to as the *parting line* when the casting is viewed in two dimensions.

The vertical passage through which the molten metal fills the casting is called the *sprue* or *downsprue*. The horizontal distribution channels in the parting plane are called the *runners*. The connections between the runners and the cavity of the part to be cast are called the *gates* or the *ingates*. Those extra parts of the casting that feed metal to the casting as it solidifies and shrinks are called the *risers* or *feeders*. Sometimes, metal pieces are used in the mold to speed up the solidification rate at certain locations. Those metal pieces are called *chills*.

The design of the rigging system starts with the determination of the parting plane. Identification of the gate locations to allow uniform feeding of the casting is the next step. Having decided where the gates are located, an appropriate runner geometry is selected. The sprue location is determined so that it will be as far from the nearest gate as possible. Sizing of the elements of the rigging system is done using the geometry of the part and some common rules of thumb. Traditionally, these activities have been performed by methods engineers, based on their training and experience. It is not uncommon for several trial rigging designs to be required in producing a sound casting.

This paper presents a listing of the rules, as compiled from the literature and interviews with methods engineers. The paper is intended to present the similarities and differences in the rigging system design of three classes of castings: light alloy, ductile iron and steel. While the rules are listed as they relate to different components of the rigging system, the design of individual components are not independent of the others.

The rest of the paper will present the gating and risering practice for light alloy, ductile iron and steel castings. References will be listed as appropriate.

LIGHT ALLOY CASTINGS

As a general rule, the rigging system is designed to promote sequential solidification of the casting. Campbell[2] points out that the filling of the mold is also important in preventing the entrapment of oxides and air in the casting. Since oxide formation is instantaneous in aluminum, the rigging system should be designed to minimize the entrance of oxides on the surface of the molten metal into the casting and also to prevent turbulence in the metal stream, as this would entrap the surface oxides in the stream and lead to further oxidation on the surface when fresh metal is exposed to the atmosphere.

Turbulence in the metal flow may be caused by excessive velocity of the molten metal, free-falling of the stream while passing from one level to another, vortices formed, or abrupt changes in the flow direction. Sharp changes in the flow direction will form eddies at the corners, and these will cause aspiration of air and mold gases into the molten metal.

The low density of aluminum makes riser design more difficult than for most other heavy metals. In addition, its low heat-released-per-unit-volume ratio and high conductivity makes the gating design a real problem in terms of sequential solidification requirements.

The pouring cup should be kept full during pouring of the metal to prevent vortex formation in the sprue. A pouring basin can be used to ease the filling of the mold and also to minimize the possibility of air and oxide entrance into the mold cavity. The filling of the pouring basin should be done as far from the sprue as possible. The size of the basin can range from 3 in. to 4 ft (7.62–122 cm) in length, the latter being for sprues through which 800 lb of metal is poured.[1]

Skimmer cores, filters or delay screens can also be used in the pouring basin, to help provide cleaner metal into the mold.

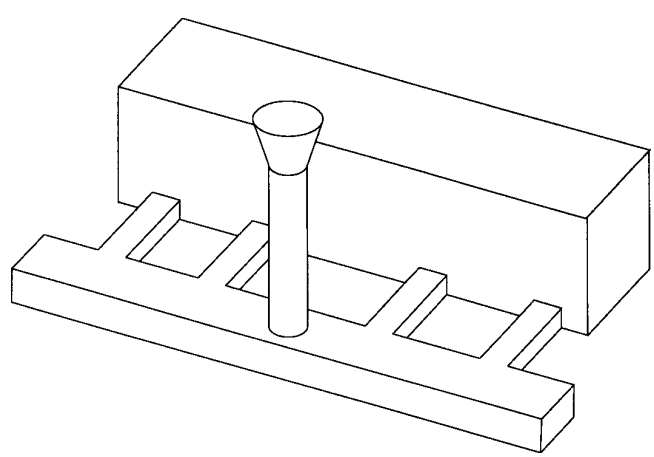

Fig. 1. Generic casting and rigging system.

Part Orientation Rules (Alloy)

Part orientation is usually the first decision that must be made in rigging design. Orientation of the part actually refers to the cavity in the mold in the shape of the part that is going to be cast. The rules are as follows:[4,9]

1. Orient the part so that the large part of the casting is relatively low.
2. Minimize the height of the casting.
3. Place open spaces down.
4. Place the casting such that top risers can be placed on high points on the casting for the heavy sections.

Parting Plane Rules (Alloy)

The plane that separates the cope (top) and the drag (bottom) parts of the mold is called the parting plane. In general, the runners, gates and sprue well are placed in the drag so that the parting plane forms the top of these channels or cavities. The runners, gates and the sprue box (bottom part of the sprue) are going to be located on the parting plane. This plane also divides the mold into two parts, i.e., drag and cope. Parting plane rules are listed as follows:

1. Place the parting plane as low as possible relative to the casting.
2. Place the parting plane at the cross section of the largest area of the casting.[20]

Sprue rules (Alloy)

The sprue, or downsprue, is the part of the rigging into which the molten metal is poured. The design of the downsprue is crucial in order to avoid initiation of turbulent flow in the rigging system. Turbulent metal flow might cause an increased area to be exposed to air, and thus an increased oxidation of the metal. Those oxides may rise to the top of the casting to form a rough surface for the casting, or they may be trapped in the casting and create imperfections. Turbulent flow may also cause erosion of the sand mold. The following is a list of typical rules used in sprue design:

1. The sprue should be sized to limit the flow rate of molten metal. If the sprue is large, the flow rate of the molten metal will be high. High metal flow rates cause dross problems.[2] Blind-ends on the runners help to trap unwanted dross.
2. The size of the sprue fixes the flow rate. In other words, the amount of molten metal that can be fed into the mold cavity in a given time period is limited by the size of the sprue.
3. Rectangular cross-section sprues are better than circular ones with the same cross-sectional area, since critical velocity for turbulence is much less for circular sections. In addition, vortex formation tendency in a sprue with circular cross section is higher.
4. Sprues should be of standard sizes and shapes. Swift, Jackson and Eastwood[30] studied rectangular and round-shaped sprues with cross-sectional areas ranging from 0.50 to 1.50 in.^{2} (1.27 to 3.81 cm^2). Generally, rectangular sprues are used to avoid vortex problems. However, round sprues with small height and radius do not cause vortex problems, are easier to make and, thus, are more economical for small castings.
5. If the metal flow rate is known, then the sprue exit area can be calculated using the following formula suggested by Richins and Wetmore:[26]

$$A = \frac{Q}{w\sqrt{2gh}} \tag{1}$$

where Q : rate of flow [lb/sec]
w : specific weight of metal (0.086 lb/in.^{3} for Al at 732C)
A : cross-sectional area [ft^2]
g : gravitational acceleration [ft/sec^2]
h : vertical height of molten metal in the sprue [ft].

6. Height of the sprue is determined by the casting and the top riser height.
7. The sprue should feed into a standard-sized well area to reduce the kinetic energy of the molten metal.
8. Standard filter/screens should be placed at the outlet of the well as the metal flows into the runners. It is desirable to lower the total number of filters per casting.
9. The sprue should be located as far from the gates as possible. Often, the flow leaving the sprue box is turbulent; a longer path and a filter enables the flow to become more laminar before it reaches the first gate.
10. The sprue should be located centrally on the runner, with an equal number of gates on each side.
11. Extreme sizes should be 1/2x3/16 in. (1.27x0.48 cm) for "small castings" and 1x4 in. (2.54x10.16 cm) for "large thin panels.''[1]
12. Using a tapered sprue results in a lower height sprue than an untapered sprue, while retaining the same flow rate.
13. Sprues should be tapered by approximately 5% minimum to avoid aspiration of the air and free fall of the metal. Swift et al.[30] suggest that an ideally tapered sprue of length 10 in. (25.4 cm) and exit area 3/4 in.^{2} (1.90 cm^2) should have an entry area of 2.03 in.^{2} (5.16 cm^2) at the bottom of the sprue basin and 9.06 in.^{2} (23.01 cm^2) at the top of the sprue. If the sprue length is 6 in. (15.24 cm), the entry area for the bottom of the sprue basin and the top of the sprue must be 1.78 in.^{2} and 7.23 in.^{2} (4.52 and 18.4 cm^2), respectively. The profiles for the sprues suggested by Swift et al., are not linear. The first one has about 14% average slope with a minimum slope of 4% at the bottom of the sprue and a maximum slope of 48% at the top. The second one has a changing slope from 6% to 39% with an average slope of 17%.
14. Sprues can be tapered slightly more than required to provide a factor of safety for aspiration of air.[1]
15. Rectangular sprues of length less than 5 in. (1.27 cm) may be given a small reverse taper for ease of molding.[1]
16. Well area for the sprue box is two to three times the area of the sprue exit.[15]
17. The well is about 1/2 in. (1.27 cm) deeper than the runners.

Riser Rules (Alloy)

Risers are reservoirs of molten metal that are used to feed the casting during solidification. The shrinkage occurring during solidification causes voids unless more molten metal can be fed to the potential problem spots. Risers are designed to solidify last and to draw the shrinkage voids out of the casting. Risers also serve as exits for gases and dross entrapped in the metal and as pressure heads to feed thin sections.

1. Risers are located near thick sections of the casting. For example, hubs are relatively thick parts of castings and are potentially good locations for the risers.

2. Side risers are usually located on top of the gates. Use of side risers is common for thin-walled castings. Since the first metal to enter the casting will warm the bottom of the side riser and cool down, and side risers will be filled with hot metal, use of side risers promotes sequential solidification.
3. Top risers are located on bosses, away from the gates.
4. If the casting is bottom-gated, fast filling of the mold with more gates, use of insulated or exothermic risers, and chilling the gate area are safe practices to cure unfavorable temperature gradients. In the case of open risers, hot metal can also be poured into the riser after solidification starts.
5. Risers are sized by the volume fed. In the case of multiple risering, each riser is considered to be feeding a part of the casting and is sized according to the volume of that part in question.
6. Risers should be large enough to provide at least as much feed metal as the shrinkage volume of the section it feeds (4 to 6%).[16]
7. If the top of the riser is not open to atmospheric pressure, the height:diameter ratio of 1:1 to 3:1 should be maintained for a cylindrical riser.
8. Top risers should be located on flat, accessible surfaces so that they can be easily.
9. External risers are preferred to internal ones because of easy removal and cleanup after production.
10. Risers should have greater volume:area ratios than the part itself, so that the part will solidify before the risers. In the calculation of this ratio, the area used does not include the area between the part and the riser or the area between the part and the gates. This rule is suggested by Chvorinov [Ref. 5, pages 177, 201, 222] and has been applied to practice by most workers. Chvorinov's rule can be expressed in inverse form as the following:

$$\frac{A_{riser}}{V_{riser}} < \frac{A_{part}}{V_{part}} \tag{2}$$

or, assuming that a cylindrical riser is used,

$$\frac{\pi r^2 + 2\pi rh}{\pi r^2 h} < \frac{A_{part}}{V_{part}} \tag{3}$$

where r is the radius of the riser and h is the riser height. Simplifying Equation 3 gives:

$$\frac{r + 2h}{rh} < \frac{A_{part}}{V_{part}} \tag{4}$$

or

$$\frac{1}{h} + \frac{2}{r} < \frac{A_{part}}{V_{part}} \tag{5}$$

The height obtained using Equation 4 or Equation 5 is usually multiplied with a factor of safety of about 1.2. On parts that have cylindrical bosses, the radius of the riser selected is slightly less than that of the boss to ease the removal of the riser from the part after solidification.
11. The volume of the riser can be calculated using the M-C method developed by Creese.[6]
12. Risers should be selected from standard sizes and shapes. The best riser shape is a sphere because of its high volume-to-area ratio, but it is not easy to work with spherical risers. Circular cylinders are frequently used as risers, as they are the second best, as far as the volume-to-area ratio is concerned.
13. If there needs to be multiple risers, they should be located at least 4–5 in. (10.16–12.7 cm) apart.
14. If two nearby thick sections are risered, the thin section in between may contain porosities. The problem may be avoided by risering one thick section and chilling the other.
15. The maximum feeding distance depends upon whether the alloy is a short-freezing range or a long-freezing range alloy. Maximum feeding distance for an aluminum plate of thickness T varies from 8T to 3T as the thickness of the plate varies from 1/2 in. to 2 in. (1.27 to 5.1 cm). Feeding ranges for magnesium alloys are not reported; however, various magnesium alloys show very different feeding behavior. Feeding ranges for various long-freezing range alloys are investigated in studies by Davies,[7] Moosbrugger and Berry,[22] and Kuo, Chang and Lin.[21]
16. The riser junction should be heavier than the section to be fed. For horizontal plates it is a better practice to use side risers [Ref. 1, page 31].
17. Ideally, the cross section of the riser is slightly larger than the section it feeds.[1]

Gate Rules (Alloy)

Gates are the passages between the runners and the part. Woldman[33] asserts that a good gate design is independent of the alloy cast. The following rules on gate design are in common practice:

1. Gate into thick regions.
2. Use standard sizes and shapes for the gates. Rectangular gates are most widely used.
3. Locate the gates so as to minimize the agitation and avoid the erosion of the sand mold by the metal stream. This may be achieved by orienting the gates in the direction of the natural flow paths.
4. Fillets between the gates and the casting are desirable.
5. A slight flare of the gates toward the casting is desirable.
6. Multiple gating is frequently desirable. This has the advantage of lower pouring temperatures, which improves the metallurgical structure of the casting. In addition, multiple gating helps to reduce the temperature gradients in the casting.
7. Maximum gate thickness should be 1/4–3/8 in. (0.64–0.95 cm).[1,18]
8. The first gate should be located at a minimum 1.5 in. (3.81 cm) distance away from the sprue, for small castings. This distance should be increased up to 12–15 in. (30–38 cm) for large castings.[1] The longer that distance is, the easier the cleaning of the casting will be.
9. A minimum gate length of 3/4 in. (1.90 cm) is usually sufficient for "small" bench molds and 4 in. (10.16 cm) is sufficient for larger molds.[1]

Runner Rules (Alloy)

Runners are the passages that carry the molten metal from the sprue well to the gates through which metal enters the mold cavity. The runners are often arranged in one of two configurations: double runner and single runner. Double runners consist of two passages around the part. The metal enters the outer runner first and moves to the inner runner through short passages. Single runners can further be classified as tapered and untapered runners. The selection of the runner type depends on the difficulty of the part and the engineer's

preference. Double runners are usually used for more difficult parts, thin-walled sections in particular. The rules that are commonly used for runner design are as follows:

1. Standard sizes and shapes are used for runners.
2. Rectangular cross sections are preferred in sand castings.
3. Abrupt changes in the direction of runners should be avoided. If the change in direction is more than about 15°, the joint needs to be filleted.
4. Runners run along the part for long parts.
5. For round parts, usually two runners run around the periphery of the part.
6. Runner extensions (blind ends) are used in most castings to trap any dross that may occur in the molten metal stream. Blind-ends are 1–12 in. (2.5–30.4 cm) in length.
7. The runner area is three to ten times the cross-sectional area of the sprue exit.
8. Runners are sized using a gating ratio[27] prescribed for the type of metal used in casting. If a ratio of 1:4:4 is to be used, the total area of the runners should be four times the area of the sprue exit and the collective area of the gates should be four times the area of the runners.
9. It is best to keep part of the runner above and part of it below the gate levels. The part of the runner above the gate level will trap the entrained gas in the cope portion of the casting, and the part below will act as a surge reservoir. The metal will be leveled before it enters the gates.
10. Runners should maintain a minimum distance from the part.
11. A relief sprue at the end of the runner can be used to reduce the pressure during pouring and also to observe the filling of the mold.

STEEL CASTINGS

Materials with a short freezing range (liquidus-to-solidus interval < 50°C) form a skin and solidify parallel to the mold walls. This type of solidification usually leads to "centerline shrinkage," which is a collection of shrinkage voids along a line at a relatively thin section of the casting. Centerline shrinkage is a common failure in steel castings, and, therefore, proper feeding should be provided through a well-designed rigging system to manufacture sound castings.

- Since the rigging system is exposed to hotter metal than the part being cast, higher quality sand should be used in the rigging system regions of the mold.
- The gating system should be kept simple, due to the high viscosity of molten steel.
- Strainer cores, filters and relief sprues are not used.
- When a nozzle and stopper system is used to fill the mold, the size of the nozzle should be slightly smaller than the sprue.
- The partial reversal method is used, where the mold is turned 30–40 degrees to place the hot metal on the top of the mold and colder metal (which first entered the mold) at the bottom. Complete reversal of the mold is usually not practical, especially for large castings.

Parting Plane Rules (Steel)

1. Placing the parting plane at about mid-height of the casting has the advantage of filling the bottom with colder metal (due to the initial temperature of the sand) and promote sequential solidification. However, high drops of the metal should be avoided.

Sprue Rules (Steel)

1. 1–2 in. (2.54–5.1 cm) sprue wells are used.
2. Sprue wells are built with a different material than the one used in the mold for higher resistance to erosion: e.g., clay brick, sand with high proportion silica flour, cement-bonded alumina.
3. In the case of deep molds, the sprue may be offset at several points rather than using a straight sprue. That practice reduces the velocity of the flow at the bottom of the sprue. In such cases, it is common to use refractory tile to build the sprue and the runners, rather than sand.
4. In case cold-shots are detected or the fine details of the casting are not filled properly, the sprue cross-sectional area should be increased.

Riser Rules (Steel)

1. For small and shallow steel castings, the gating system can be eliminated and the mold can be filled through a riser if the casting is filled using a ladle. In the case of filling from a large bottom-poured ladle, this cannot be done because of the high velocity of the metal stream.
2. Maximum feeding distance for a steel plate of thickness T is about 4.5T. The distance is 4T if there is no edge contribution. For a steel bar of thickness T, the feeding range is about $6\sqrt{T}$ if there is edge contribution, and 0.5T to 2T if there is no edge contribution. Addition of chills can increase the feeding distance by 2 in. (5.1 cm) for plates and by 1T for bars.[24] The maximum feeding distance may be extended by introduction of a taper. Willms suggests the use of insulating material to extend the feeding distance for steel.[31]
3. Vents are used to allow the escape of the gasses during the filling of the mold. Rectangular vents are preferred to round ones.
4. Blind risers should not be located below an open riser with a heavy section connecting them.
5. Knock-off risers with star-shaped apertures are suggested by Chapman.[3]
6. Volume of the risers can be calculated by the M-C method suggested by Creese.[6]
7. The modulus approach can also be used to size the risers.[32]
8. A formula for the calculation of the riser dimensions is suggested by Johns.[17] The formula developed is:

$$D_R^2 H_a = 24FW_c / \pi\rho \qquad (6)$$

where D_R : diameter of the riser
H_a : active height of the riser
F : feed metal requirement from Fig. 2[12]
W_c : weight of the casting
ρ : density of the metal.

Substituting $H_a = D_R$ and $\rho = 0.29$ lb/ft^3 results in the following:

$$D_R = 2.98\,(FW_c)^{1/3} \qquad (7)$$

The radius calculated by Equation 7 should be greater than or equal to the modulus of the casting.

9. The following cubic equation is suggested by Ruddle for the calculation of the riser diameter for steel castings.[28,29]

$$D^3 - 4\delta(1+\beta)(a+\frac{b}{4g})M_c D^2 - \frac{4\beta V_c}{g\pi} = 0 \qquad (8)$$

where D : riser diameter
δ : safety factor
β : fractional total volumetric change on freezing
g : riser height/diameter ratio
M_c : casting modulus
V_c : casting volume
a : riser sidewall insulation faction (A.S.A.F.)
b : riser top-cover insulation factor (A.S.A.F.)

Gate Rules (Steel)

1. Round gates are usually preferred to square ones of the same cross-sectional area, since round gates cause less friction and result in larger filling rates.
2. The diameter of a whirlgate should be less than the diameter of the sprue, and the cross-sectional area of the whirlgate should be greater than the sum of the cross-sectional areas for the gates.
3. For large, flat-bottom castings, the gated end of the casting should be low, so as to force the metal to run a slight incline.
4. The cross-sectional area of the gate should be smaller than that of the casting at gate-casting interface.
5. Gates for steel castings should be considerably larger than those used for cast-iron castings. If gate sizes are smaller than adequate, cold shuts may be formed where two streams join around a core.
6. A 1:4:4 gating ratio is commonly used to size the gates.
7. Plate castings should be filled with multiple gates to minimize erosion of the mold. The cross-sectional area of the individual gates need not be larger than the exit area of the sprue.
8. The number of gates should be maximized to prevent hot spots.
9. If a single gate is used to fill the mold, the gate should flare toward the casting.
10. Horn gates are used for small castings, but they are neither very economical, nor easy to mold.
11. In circular parts, like gears or wheels, gating is usually done tangential to the gear to let the metal stream go around the periphery of the casting and prevent the erosion of the core.
12. For circular parts with spokes connecting the rim to the hub, core gates are better to promote sequential solidification. This allows the metal entering the mold cavity to cool down while going through the spokes, and lets the cool metal fill the rim of the casting, away from the riser that will be located on the hub.

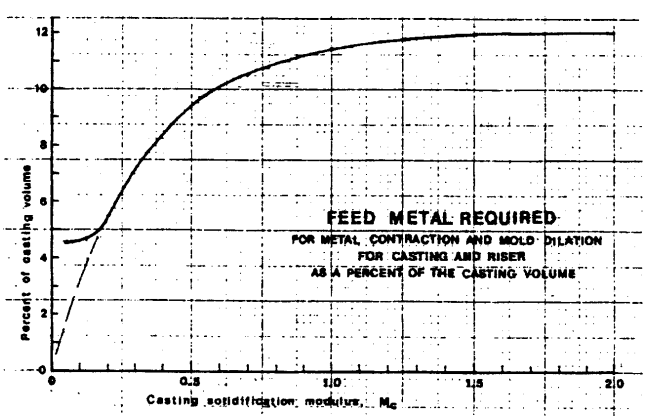

Fig. 2. Feed metal requirements.[12,17]

13. Saxophone type step-gating may be used for deep molds. The gates come off the sprue at several different levels and slope upward. The idea is to fill the different levels of the casting with corresponding gates.[11]
14. Gates are usually located in the cope.
15. Gates may be curved to streamline the flow toward the casting.

Runner Rules (Steel)

1. A 1:4:4 gating ratio is commonly used to size the runners.
2. The depth of the runner may be changed so that it is shallow at the sprue and progressively deeper toward the end.
3. Runner extensions are used to trap dross.
4. Hollow cylindrical castings should be cast with gates and runners inside the casting, whenever possible. This kind of gating delays the solidification of the gates and the runners, relatively, and reduces the chances of cracks due to contraction of the casting. One disadvantage to this type of gating, however, is the difficulty in cleaning the rigging system after the part is cast.
5. Runners are usually located in the drag.

DUCTILE IRON CASTINGS

The rules presented in this section are mostly extracted from a book by Karsay[19] and seminar lecture notes prepared by QIT-Fer et Titane Inc.,[25] which are possibly the most complete references on gating and risering of ductile iron.

Two types of gating systems are used in ductile iron castings: namely, pressurized and nonpressurized. These are also known as "gate-runner" and "sprue-runner" systems, respectively. The difference between the two systems is the location of the choke, which is the minimum cross-sectional area in the rigging system that determines the mold-filling time. For gate-runner systems, the choke is located between the runner and the gate, whereas it is located between the sprue and the runner for sprue-runner systems.

- Sprue-runner systems are used where a large number of small castings are cast in the same mold with small choke area requirements. In most other cases, gate-runner systems are used.
- A combination of both sprue-runner and gate-runner systems can be used for castings that require a complicated runner system.
- Pouring time should be as fast as possible. Figure 3 can be used to determine a recommended value for the pouring time.

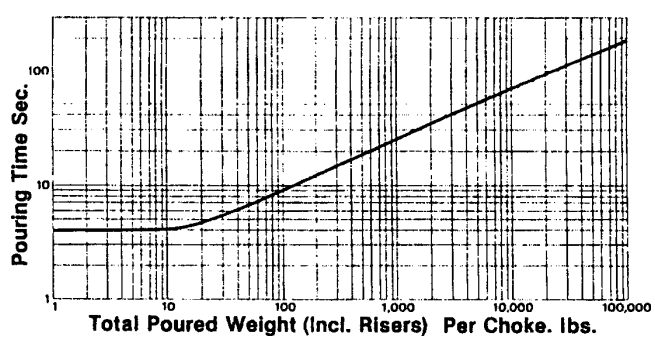

Fig. 3. Recommended pouring times depending on pouring weight.[25]

Parting Plane Rules (DI)

1. Minimize the need for cores.
2. Place heavy sections in the drag.
3. Try to put all or most of the casting in the cope for quiet mold filling. The disadvantage of this placement is that the yield will be small for castings that require a short filling time.

Sprue Rules (DI)

1. Locate the sprue symmetrically.
2. For sprue-runner systems, the choke cross-sectional area can be estimated using Figs. 4 and 5. For multiple casting molds, the total choke area is the sum of all the choke areas downstream of the sprue.
3. Sprue should not act as choke.
4. The minimum sprue cross-sectional area can be calculated using the following equation:

$$A_{sprue} = A_{choke}\sqrt{H/h} \tag{9}$$

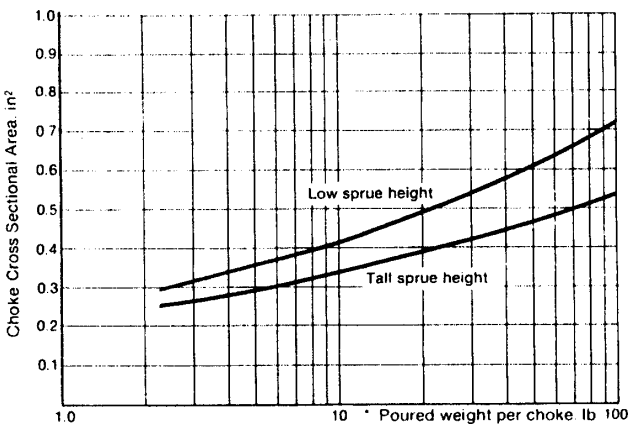

Fig. 4. Approximate choke cross-sectional areas for small poured castings.[19]

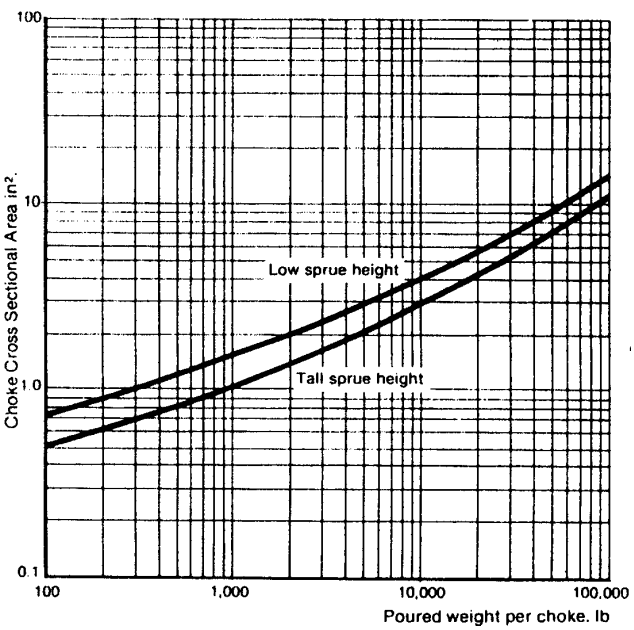

Fig. 5. Approximate choke cross-sectional areas for large poured castings.[19]

where A_{sprue} : cross-sectional area of the sprue
A_{choke} : total choke cross-sectional area
h : height of metal in the pouring basin
H : vertical height of molten metal in the sprue.

For downward tapered sprues, h is measured to the smallest cross section of the sprue.

5. For sprue-runner systems, the choke area can be located at the bottom of the sprue for tapered sprues or between the sprue box and the runner.
6. Sprue area calculated using Equation 9 can be taken as the minimum cross-sectional area for upward taper, downward taper and parallel sprues.
7. Avoid use of parallel sprues.

Riser Rules (DI)

1. Risering should be designed one of three ways: conventionally, as in steel castings; riserless[23] with multiple gates, for castings not poured in green sand; or with a single riser and multiple gates.
2. Risering principles for green sand castings are presented by Heine.[13]
3. Minimize the number of risers by feeding multiple sections of the casting with a single riser, if possible.
4. Sizing should be done using modulus calculations.[19]
5. The M-C method can also be used for sizing the risers.[6]
6. It is desirable to make the height of the riser larger than its diameter.
7. Standard risers can be used to expedite the volume and modulus calculations.
8. Break-off or Washburn cores are used to reduce the cost of riser removal and cleaning.
9. Use blind risers.
10. Side risers should be connected to the casting with a short passage choked at the middle section (riser contact).
11. Selection of the risering method (pressure control, directly applied, or riserless) can be made using the casting modulus.[25]

Gate Rules (DI)

1. If multiple, identical castings are cast in the same mold, gate all of them in the same manner.
2. Minimum gate length should be five times the gate thickness.
3. Recommended gate thicknesses can be determined for a given pouring temperature using Fig. 6.
4. For gate-runner systems, the choke area obtained from Figs. 4 and 5 is the total choke area, i.e., the sum of the gate cross-sectional areas. For multiple chokes, each choke area is selected using the weight calculated by dividing the sum of the weight of the castings and risers by the number of chokes.
5. For gate-runner systems, the junction between a gate and a runner should be such that the bottom surface of the gate should be placed on the same plane as the bottom surface of the runner.
6. For gate-runner systems, gates should come off the runner at a right angle.
7. For sprue runner systems, the gate's bottom surface should be placed on the top surface of the runner.
8. For gate-runner systems, the total area of gate overlap on the runner should be about 10% more than the choke area.

9. For gate-runner systems, gate overlap on the runner is slightly more than the height of the gate.
10. For gate-runner systems, two gates should not be located on opposite sides of a runner at the same point.
11. For gate-runner systems, gates should be thin and wide. A height-to-width ratio of 1:4 is reasonable.
12. For gate-runner systems, two thin and narrow gates should be preferred to one thick and wide gate.
13. For gate-runner systems, the gates can be as long as needed but the minimum gate length should be equal to the gate width.
14. For gate-runner systems, the gates can be straight or curved.
15. For sprue-runner systems, gates are always located in the cope.

Runner Rules (DI)

1. Avoid use of curved runners.
2. If curved runners are necessary, locate gates as far from the curved sections as possible.
3. Avoid use of stepped runners.
4. For gate-runner systems, use tall, narrow runners. A height-to-width ratio of 2:1 is reasonable.
5. For gate-runner systems, the cross-sectional area of a runner should be three to four times the sum of the cross-sectional areas of the gates on that runner.
6. For gate-runner systems, the ratio of the runner cross-sectional area to the choke area is between 4:1 and 2:1
7. For gate-runner systems, use tapered blind ends with approximately 20% slope.
8. For gate-runner systems, a well can be employed at the end of the blind end (runner well), which is of particular use when there is not much space in the mold for proper runner extension.
9. For gate-runner systems, the minimum distance between the sprue and the first gate on the runner should be about four times the height of the runner.
10. For gate-runner systems, the minimum blind-end extension should be about four times the runner height.
11. For gate-runner systems, the length of the runner extension and the distance between the sprue and the first gate are preferably the same. If this cannot be attained, the latter can be made one-half of the former.

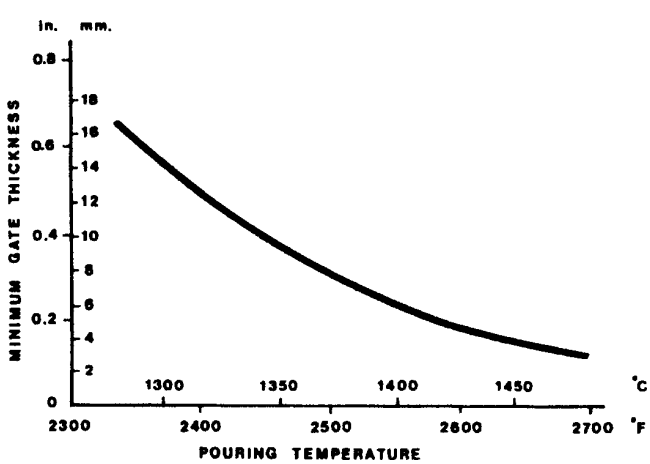

Fig. 6. Recommended gate thicknesses.[19]

12. For sprue-runner systems, the runner cross section is square at the choke section.
13. For sprue-runner systems, the runner is always placed in the drag.
14. For sprue-runner systems, the runner is tapered such that right after the choke, the runner height is four times the height at choke, and past the last gate, it is equal to the height at choke.

CONCLUSIONS

A collection of rigging system design rules are presented for light alloy, steel and cast iron castings. From the rules given, it can be observed that the geometric features of the casting, such as casting boundaries, location of cores, thick regions and flow paths, are of primary importance for the design of the appropriate gating system. Therefore, any attempt to develop a computer program for design of rigging systems should give major emphasis to the task of geometric feature extraction.[8,10,14]

REFERENCES

1. American Foundrymen's Society. *Recommended Practices for Sand Casting Aluminum and Magnesium Alloys.* Des Plaines, IL, 2nd edition, 1965.
2. J. Campbell. *Casting.* Butterworth-Heinemann Ltd., Oxford, England, 1991.
3. B. Chapman. Some characteristics of knock-off heads on steel castings. *AFS Transactions,* 88:777-786. 1980.
4. L. L. Chen, S. Y. Chou and T. C. Woo. Parting directions for mould and die design. *Computer-Aided Design,* 25(12):762-768, Dec 1993.
5. N. Chvorinov. Theory of solidification of castings. *Giesserei,* 27:177-225, 1940.
6. R. C. Creese. The M-C method for riser design for non-ferrous and ferrous metals. *AFS Transactions,* 94:257-260, 1986.
7. V. de L. Davies. Feeding range determination by numerically computed heat distribution. *AFS Cast Metals Research Journal,* 51, 1975.
8. S. Guleyupoglu. A general approach to the parting direction problem for sand castings. Ph.D. thesis, The University of Alabama, Tuscaloosa, AL, 1995.
9. S. Guleyupoglu and J. L. Hill. Parting direction and parting plane selection criteria for sand castings. *AFS Transactions,* 103:259-264, 1995.
10. S. Guleyupoglu, K. O. Yu and J. L. Hill. Analysis and optimal design of risers based on section modulus method. In *Proc. 9th World Conference on Investment Castings,* San Francisco, CA, Oct 1996. In press.
11. J. H. Hall. *Steel Foundry Practice.* The Penton Publishing Company, Cleveland, OH, 1955.
12. R. W. Heine. Riser design for mold dilation. *AFS Transactions,* 73:34-40, 1965.
13. R. W. Heine. Risering principles applied to ductile iron castings made in green sand. *AFS Transactions,* 87:267-278, 1979.
14. J. L. Hill, J. T. Berry and S. Guleyupoglu. Knowledge-based design of rigging systems for light alloy castings. *AFS Transactions.* 99:91-96, 1991.
15. J. L. Hill, J. T. Berry, D. M. Stefanescu and C. Jordan. Expert systems research on the design of gating systems for light alloy casting. BER Report 408-141, Bureau of Engineering Research, University of Alabama, Tuscaloosa, AL, Oct 1987.
16. S. Jacob and M. Drouzy. Contribution a l'etude du masselottage des alliages d'aluminium coules en sable. *Fonderie,* 296:395-406, Dec 1970.
17. R. A. Johns. Risering steel castings easily and efficiently. *AFS Transactions,* 88:77-84, 1980.

18. H. W. Kachler. *Casting Kaiser Aluminum.* Kaiser Aluminum and Chemical Sales Inc. Oakland, CA, 2nd edition, 1965.
19. S. I. Karsay. *Ductile Iron III: Gating and Risering.* QIT-Fer et Titane Inc., Montreal, Quebec, 1981.
20. R. M. Kotschi. The missing algorithms to fully computerize gating, risering and cam tooling manufacture, Part 1. *AFS Transactions,* 97:689-694, 1989.
21. Y. S. Kuo, E. Chang and Y. L. Lin. The feeding effect of risers on the mechanical properties of A201 Al alloy plate castings. *AFS Transactions,* 97:777-782, 1989.
22. J. C. Moosbrugger and J. T. Berry. Calculation of feeding range data for hypoeutectic A-357 alloy using FEM solidification model results. *AFS Transactions,* 94:171-178, 1986.
23. Q. X. Pei, T. S. Bai and P. C. Liu. Riserless design of ductile iron castings by computer program. *AFS Transactions,* 95:443-450, 1987.
24. W. S. Pellini. Factors which determine riser adequacy and feeding range. *AFS Transactions,* 61:61-80, 1953.
25. QIT - Fer et Titane Inc. Ductile Iron: *The Essentials of Gating and Risering System Design Seminar Lecture Notes.* Montreal, Quebec, 1987.
26. D. S. Richins and W. O. Wetmore. *AFS Symposium on Principles of Gating,* page 1. AFS, Des Plaines, IL, 1951.
27. R. W. Ruddle. *The Running and Gating of Sand Castings.* The Institute of Metals, London, England, 1956.
28. R. W. Ruddle. Risering—past, present and future. *British Foundryman,* 71:(a) 197, 1978.
29. R. W. Ruddle. A computer program for steel risering. *AFS Transactions,* 90:227-237, 1982.
30. R. E. Swift, J. H. Jackson and L. W. Eastwood. A study of principles of gating. *AFS Transactions,* 57:76-88, 1949.
31. R. C. Willms. Use of insulating material to extend feeding distances for steel castings. *AFS Transactions,* 93:167-171, 1985.
32. R. Wlodawer. *Directional Solidification of Steel Castings.* Pergamon Press, Oxford, England, 1966.
33. N. F. Woldman, editor. *Magnesium Castings from Magnesium.* American Society of Metals, Metals Park, OH, 1946.